SCIENTIFIC PROBLEMS
OF MACHINES OPERATION
AND MAINTENANCE
4 (160) 2009

G.A. LIVANOS*

The development of a simplified test rig for measuring the average friction torque of the piston-crank-slider mechanism of an internal combustion engine

S u m m a r y

The objective of this paper is to present a simplified friction measurement test cell for measuring the friction, developed on the main components of the piston-crank-slider mechanism of an internal combustion engine, including complete piston ring packs, piston skirts, connecting rod bearings and crankshaft main bearings. In detail, the main objective of this study was to measure average friction torque absorbed by an engine in motoring conditions. The proposed cell consists of an AC electric motor driving the piston-crank-slider mechanism of a typical, small, single cylinder, four-stroke engine.

Several experimental runs were performed using this cell and the obtained results were compared with results from a detailed numerical engine friction simulation code, previously developed and published by the author(s) [Livanos et al]. Good agreement was found between simulation and experimental results, indicating that the proposed cell is capable of adequately predicting the dynamic friction behaviour of rotating and oscillating engine main components.

1. Introduction

The continuous increase of the green house emissions in conjunction with the limited and finite fuel resources make the improvement of efficiency of all engines, converting fuel chemical energy to mechanical energy, imperative.

* Technological Educational Institute of Athens.

Even a small increase in an engine's mechanical efficiency can be proved significant in economical and environmental terms. Towards this direction, the tribology studies of the Internal Combustion Engines, mainly used as propulsion, power generation and auxiliary machines, are considered important for the design of new engines and the improvement of existing ones.

A significant amount of work has been done through engine tests, experiments, and theoretical modelling to understand the different aspects of the friction of internal combustion engines. Benefiting from more and more experimental evidence, modelling work has been advancing in many aspects and has played an important role in understanding the physics of engine friction components and giving practical guidance to the design processes.

Bishop conducted several motoring tests for single, four, six, and eight cylinder spark ignition and Diesel engines with several configurations and compression ratios and published five equations [Bishop, I.N. et al] predicting the mechanical friction of the piston assembly, the blow-by losses related to heat and leakage losses during the compression and expansion strokes, the inlet and throttling losses, the crankcase mechanical friction, and the combustion chamber and valve pumping losses.

McAulay et al publish a much simpler expression, considering that the total friction losses vary linearly with the maximum in cylinder pressure and the piston speed [McAulay K.J., et al]. Towards the same direction, Winterbone and Tennant measured motoring friction under steady state conditions for a six-cylinder turbocharged engine and proposed a formulae, linearly relating the Friction Mean Effective Pressure (F.M.E.P) with engine speed and maximum in-cylinder pressure [Winterbone et al]. Another formula for determining the total firing friction losses of Diesel engines, obtained from tests with eight different engines with cylinder bores from 76.5 to 520 mm and with one, four, six, and twelve cylinders, is that of Thiele [Thiele, E, et al].

In 1989, Patton [Patton, K.J., et al] from the Sloan Automotive Laboratory of M.I.T. developed a semi-empirical friction model for spark ignition engines. The model predicts the engine friction in terms of F.M.E.P., by applying different expressions for the crankshaft friction, the reciprocating friction, the valve-train friction, the auxiliary component losses, and the pumping losses. The data used to develop this model date back to the mid-1980s. Recently, the Sloan Automotive Laboratory improved the Patton's model with more recent data and published an updated model [Sandoval, D., et al].

The objective of the presented work is the study of the total friction developed on the main components of the piston–crank slider mechanism (Figure 1) of a typical small four stroke internal combustion engine. In the framework of this study, a simplified test rig was developed for the measurement of the engine absorbed friction under several different motoring speeds.

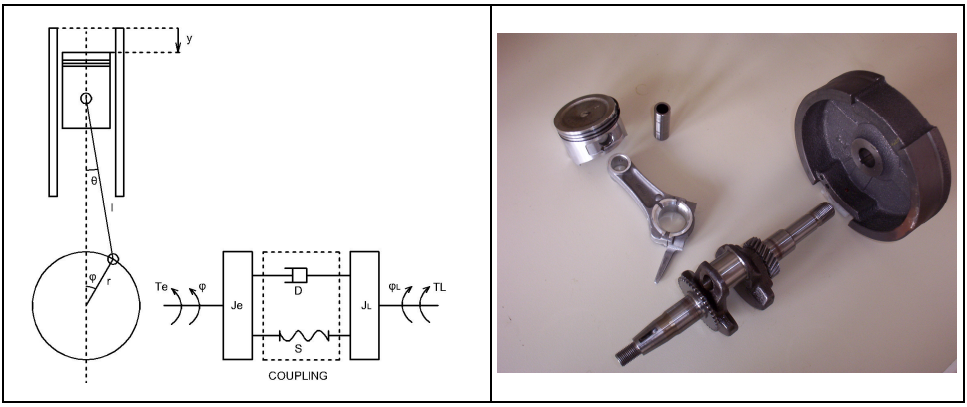

Fig. 1. Schematic Diagram (left) and photo (right) of the piston crank slider mechanism of an internal combustion engine

2. Problem formulation

Measuring engine friction is too complicated, since friction loss is a small percentage of the total engine available energy. Motoring engine tests are commonly used and probably are the easiest technique to evaluate engine friction. This type of testing involves rotating the engine with a motoring dynamometer and recording the torque required to maintain a constant speed.

In the case of an electric motor, which drives a single cylinder engine, the dynamic model presented in Fig. 2 can be adopted. In this model, the electric motor and the single cylinder engine are represented by two disks with J_e and J_m polar moments of inertia, respectively. The electric motor is directly connected to the first hub (J_{c1}) of the coupling via a shaft with spring stiffness S and damping D; whereas, the single cylinder engine is connected to the second hub (J_{c2}) of the coupling, via a shaft with spring stiffness S2 and damping D2. The two hubs of the coupling are connected each other with a rubber part with S1 and D1 stiffness and damping coefficients, respectively.

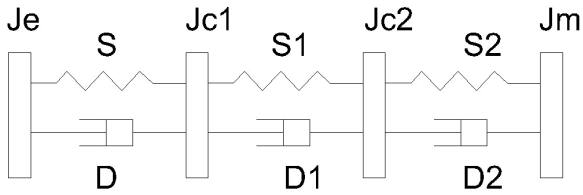

Fig. 2. Engine Modelling Configuration – Dynamic Model

Applying second Newton's Law for each disk, we get:

$$J_e \frac{\partial^2 \varphi_e}{\partial t^2} = T_e - D\left(\dot{\varphi}_e - \dot{\varphi}_{c1}\right) - S\left(\varphi_e - \varphi_{c1}\right) \tag{1}$$

$$J_{c1} \frac{\partial^2 \varphi_{c1}}{\partial t^2} = D\left(\dot{\varphi}_e - \dot{\varphi}_{c1}\right) + S\left(\varphi_e - \varphi_{c1}\right) - D_1\left(\dot{\varphi}_{c1} - \dot{\varphi}_{c2}\right) - S_1\left(\varphi_{c1} - \varphi_{c2}\right) \tag{2}$$

$$J_{c2} \frac{\partial^2 \varphi_{c2}}{\partial t^2} = D_1\left(\dot{\varphi}_{c1} - \dot{\varphi}_{c2}\right) + S_1\left(\varphi_{c1} - \varphi_{c2}\right) - D_2\left(\dot{\varphi}_{c2} - \dot{\varphi}_m\right) - S_2\left(\varphi_{c2} - \varphi_m\right) \tag{3}$$

$$J_m \frac{\partial^2 \varphi_m}{\partial t^2} = D_2\left(\dot{\varphi}_{c2} - \dot{\varphi}_m\right) + S_2\left(\varphi_{c2} - \varphi_m\right) - T_m \tag{4}$$

Where φ_i is the angular displacement of i - member, T_e is the electric motor developed torque and T_m is the single cylinder engine absorbed torque, calculated by:

$$T_m = T_{gas} + T_r + T_f \tag{5}$$

where T_{gas} is the torque produced by the in-cylinder gasses, T_r is the torque produced by the reciprocating masses of piston-crank-slider mechanism and T_f is the friction torque.

Combining the equations (1), (2), (3), (4) and (5), the following equation is derived for the calculation of the friction torque.

$$T_f = T_m - T_{gas} - T_r - J_e \frac{\partial^2 \varphi_e}{\partial t^2} - J_{c1} \frac{\partial^2 \varphi_{c1}}{\partial t^2} - J_{c2} \frac{\partial^2 \varphi_{c2}}{\partial t^2} - J_m \frac{\partial^2 \varphi_m}{\partial t^2} \tag{6}$$

Considering motoring conditions, with engine cylinder head removed and constant rotational speed, and averaging over a cycle, equation (6) reduces to:

$$\overline{T}_f = \overline{T}_m - \overline{T}_{gas}(=0) - \overline{T}_r(=0) = \overline{T}_m \tag{7}$$

Measuring electric motor developed torque and averaging over a cycle, the engine average friction torque can be calculated at any cycle.

Test rig description

Based on the theory presented in the previous paragraph, a test cell was developed. The cell consists of an a/c electric motor driving a single cylinder

engine via an elastic coupling (Figure 3). The complete configuration is rigidly mounted on a steel frame. Further description of each cell component follows.

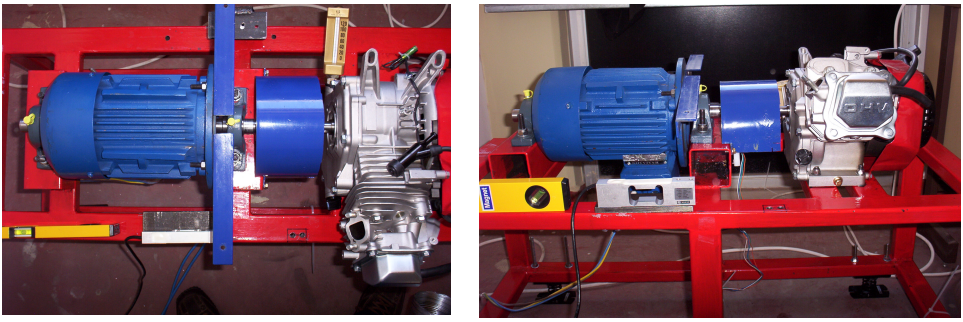

Fig. 3. Test cell configuration

An AC 3-phase asynchronous electric motor of 1.5 kW with maximum speed of 3000 rpm was used as a driving source during the motoring tests. Motor rotational speed was controlled using an AC inverter drive. The motor features an elongated shaft extended at both sides. Two bearings were selected to carry the shaft, enabling motor stator free rotation around its shaft axis. A lever arm was attached on the motor flange, fixing the stator on the cell steel frame.

In detail, when the motor is energised, an electromagnetic field is developed between rotor and stator forcing them to relative motion. As the stator is fixed on the torque arm, the rotor is free to rotate and the torque developed by the motor is transferred to the cell steel frame through the arm and it's rod. A force transducer is used to measure the transferred force, and the transferred torque is then easily calculated by multiplying the force with the length of the motor arm. It is to be noted that the lever arm was rigid enough, to prevent unwanted movements and deformations (bending) during testing.

A single cylinder (68mm Bore x 60mm Stroke), four stroke, air-cooled, spark ignition engine producing maximum power of 4.5 kW at 4000 RPM, was selected to be tested and installed on the cell (Figure 3). It is a typical engine for powering air compressors, generators, pumps, pressure washers, reel-type lawn mowers, cement trowels, and general construction equipment.

Some minor modifications were done to the engine, including the removal of the fuel tank, air cleaner filter with carburettor, exhaust gas manifold, valve train mechanism, and cylinder head valves. The objective of these modifications were to eliminate the torque produced by the in-cylinder gasses and increase the accuracy of the measurement, since the gas torque developed during compression is much larger than the piston-crank-slider mechanism friction. The relative large flywheel of the engine remained in order to ensure a constant instant engine speed as possible during a cycle.

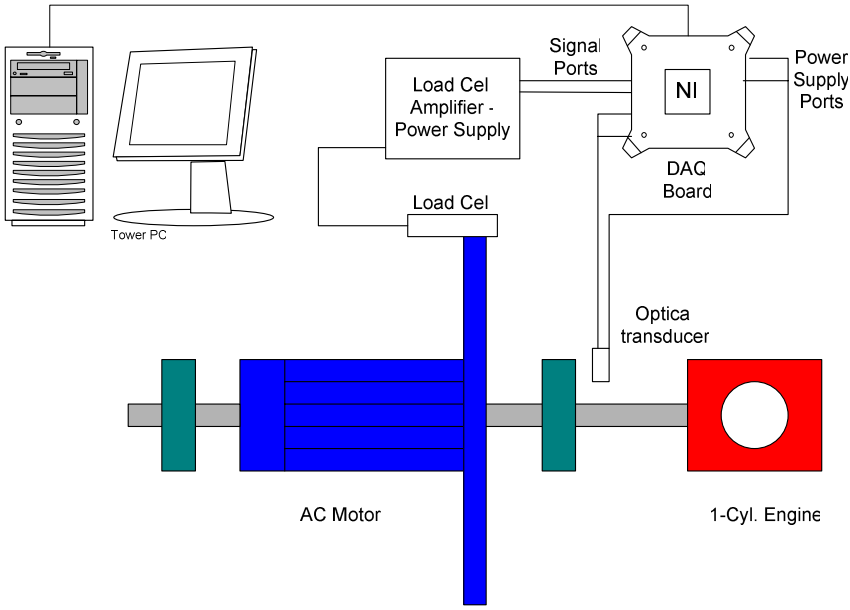

Fig. 4. Schematic diagram of measurements system setup

The measurement system of the developed friction test rig is schematically depicted in Figure 4 and consists of a load cell for force measurements, a load cell amplifier-conditioner-power supply unit, an optical transducer for the measurement of shaft speed, and a data acquisition board.

Measurement results

Following the development of the engine friction test rig, several test runs were performed. Runs with the conventional engine head, modified engine head (inlet and exhaust gas valves removed) and with no engine head were carried out. The results in the last two cases were identical, leading to the conclusion that the modified cylinder head ensures reduced (negligible) development of in-cylinder pressure. The measurement results with modified cylinder head are presented here. A SAE15W/50 lubricant was used during all tests.

Before acquiring measurements for each operating point, the engine was motored for 20 minutes in order to obtain a steady state temperature. The average recorded oil temperature ranged from 32° Celsius for low-speed runs to 42° Celsius for high-speed runs (Figure 5 - lower right). After the stabilisation of engine temperature, a 20 seconds measurement was conducted, and the average cycle torque developed by the electric motor was determined.

A typical set of measured results for 10 cycles is presented in Figure 5 (left). It is to be noted that the torque fluctuations mainly results from the inertia torque produced by the reciprocating masses of the piston crank-slider

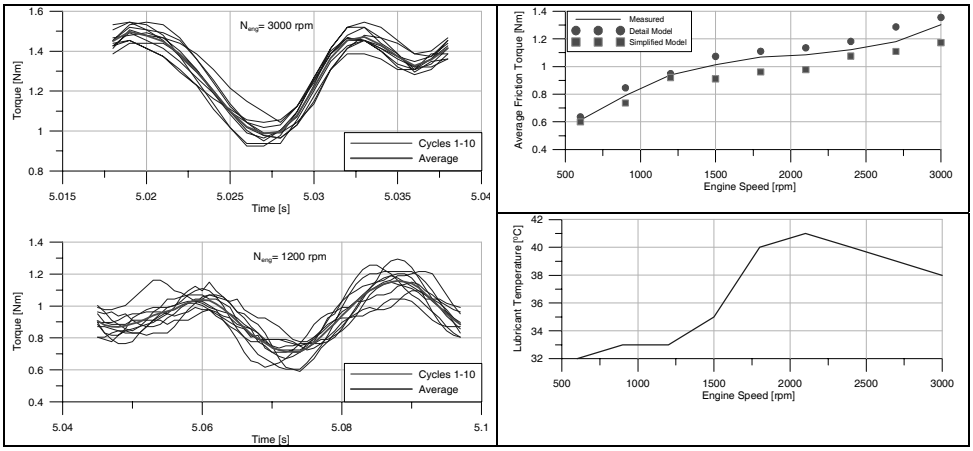

Fig. 5. Measurement results: instant absorbed torque (left), average engine friction torque – measured vs. predicted (upper right), engine oil temperature (lower right)

mechanism. Despite the action of the relative large flywheel, the inertia torque is not completely damped. The observed oscillations become more severe as speed increases, and the inertia torque obtains significant values. As a result, only the average torque over a cycle can be evaluated, since the instant rotational speed was not measured and the torque developed by the flywheel, counteracting the reciprocating torque can not be calculated. Concluding, as was shown in equation (6), the measured torque fluctuations can not be compared directly with the friction fluctuations, if the reciprocating inertia torque and the flywheel developed torque are not calculated via the instant rotational speed measurement.

Figure 5 presents the variation of the measured friction torque (averaged in 10 cycles) for several engine operating points. It is also observed that the friction torque increases with the engine speed. This indicates that hydrodynamic lubrication conditions prevail during the performed motoring tests; since, in the boundary-mixed lubrication regime, the friction coefficient decreases with the speed. It can be also seen that around 2000 rpm the friction torque slope is limited. This can be explained from the contradicted action of the speed increase and temperature increase. As the speed increases, the friction generated from the developed hydrodynamic wedge causes a temperature increase and a subsequent viscosity decrease. Following the viscosity decrease, a friction reduction occurs. There is a stabilisation point of lubricant temperature and friction depending on engine cooling system conditions. Probably, the heat generated around 2000 rpm is higher than the heat dissipated by the air cooling system, resulting in higher lubricant temperatures and lower friction. At higher speeds, the air cooling system becomes more efficient and

lower lubricant temperatures and higher friction are observed. The temperature variation is also depicted in Figure 5 (right lower part).

Following the conducted experiment, simulation runs were performed, using previously developed simulation models for the examined single cylinder test engine under the same operating conditions as that occurred during the experiment. Both detailed and simplified friction models [Livanos et al] were used, and the predicted average friction torque was superimposed on the measured values in Figure 5 (right higher part).

As can be observed, the predicted results are in good agreement with the experimental ones. The predicted results from the detailed model appear to fit better with the measured results, whereas the results from the simplified model slightly underestimate the measured values. Besides that, the reduced computational cost of the simplified model may justify the application of the model in engine transient response investigations and control studies, where lubrication condition details are of minor importance and such predicted results accuracy is accepted.

Conclusions

An experimental test-rig for friction measurements on a typical small single cylinder engine was developed. Several tests were conducted at different motoring speeds and the produced results were compared with predicted ones.

Simulation runs were performed with the detailed and the simplified friction model developed by the author(s), and the results were found to be in good agreement with the measured ones and indicated that both friction models are capable of adequately predicting the dynamic friction behaviour of rotating and oscillating engine components.

ACKNOWLEDGMENTS

The author(s) wish to thank the scientific personnel of the Laboratory of Marine Engineering of the National Technical University of Athens for the provided scientific advice and discussions. The author(s) would like also to thank the Technological Educational Institute of Athens (T.E.I. Athens) for funding the presentation of this research work in INSYCONT 2010.

References

[1] Bishop, I.N. Effects of design variables on friction and economy, SAE trans., 1965, 73, 334-358

[2] McAulay K.J.,Wu, T., Chen, S.K., Borman, G.L., Myers, P.S., Uyehara, O.A., Development and Evaluation of the Simulation of Compression Ignition Engine. SAE paper 650733, 1965

[3] Winterbone D.E., Tennant, D.W.H., The Variation of Friction and Combustion Rates during Diesel Engine Transients. SAE paper 810339, 1981

[4] Thiele, E, Determination of Frictional Losses in Internal Combustion Engines, Motortechnische Z., Vol. 43, pp. 253-258, 1982

[5] Patton, K.J., Nitschke, R.G., Heywood J.B., Development and Evaluation of a Friction Model for Spark Ignition Engines, SAE paper 890836, 1989, pp. 1441-1461

[6] Sandoval, D., Heywood, J.B., An Improved Friction Model for Spark Ignition Engines, SAE paper 2003-01-0725, 2003.

[7] Livanos G.A, Kyrtatos N.P. A model of the Friction Losses in Diesel Engines, SAE paper 2006-01-0888, 2006

Manuscript received by Editorial Board, March 16th, 2010