SCIENTIFIC PROBLEMS
OF MACHINES
OPERATION
AND MAINTENANCE
4 (156) 2008

STANISŁAW DUER*

Determination of diagnostic information of a technical object on the basis of a functional and diagnostic analysis on example of a car engine

Key words

Technical operation, control systems, technical diagnostics, neural networks, knowledge bases.

Słowa kluczowe

Obsługiwanie techniczne, systemy sterowania, diagnostyka techniczna, sieci neuronowe, bazy wiedzy.

Abstract

This paper presents a method for the creation of diagnostic information of a technical object on the basis of a functional and diagnostic analysis, with the use of three-value logic diagnostic information. Also, a general diagram of the complex technical object was presented, and its internal structure was described. A diagnostic analysis was conducted, as a result of which sets of the functional elements of the object and its diagnostic signals were determined. Also, the methodology of the diagnostic examination of the technical system was presented. The result was a functional and diagnostic model, which constituted the basis for initial diagnostic information, which is provided by the sets of information concerning the elements of the basic modules and their output signals.

The theoretical results obtained in the present study were verified in practice on the example of a complex and reparable technical object, which is a car engine. It belongs to the group of technical equipment for which a short time of shutdowns is required (an ineffective use of the object).

1. Introduction

The technical state of the object at a given time of use determines the possibilities of the realisation of its required functions. It is determined by a subset of its physical properties [1, 2, 4], which describe a given object. For practical

* Koszalin University of Technology, Department of Mechanical Engineering, Racławicka 15-17, 75-620 Koszalin, Poland, e-mail: stanislaw.duer@tu.koszalin.pl

reasons, to the states of the object in the diagnosing process, numerical values are assigned, which depend from the logics of the classification of the states applied. For divalent logics, these are states from set {1, 0}, where “1” is the operational state, and “0” is the non-operational state. For the trivalent assessment of the classification of states [4, 5], to the states of the object, states marked with the values from set {2, 1, 0} were assigned, where “2” – the state of full operation, “1” – the state of incomplete usability, and “0” – the state of non-operation (defect).

Repairable technical objects for which a short time of their shutdown is required (radar systems, aeroplanes, etc.) are frequently equipped with specialist adjustment systems, which reconstruct their functional functions to the nominal level. An adjustment system of the object’s functionality functions (Fig. 1) is a sophisticated system of the regeneration of the object, which includes the following subsystems: diagnosis and maintenance. The purpose of the diagnostic system is current and constant recognition (monitoring) of the state of the object. The maintenance subsystem regenerates an object in the states of shutdown through a reconstruction of its functionality properties to the nominal level. An adjustment system presented in this manner (Fig. 1) can perform its function, if such a diagnostic system has been developed that will recognise the object’s states in the values of trivalent logics {2, 1, 0}. A diagram of the above-mentioned process of the control of the operation process [1, 7, 8, 9, 10] by the system of adjustment of the object’s functionality function is presented in Fig. 1.

A functional and diagnostic analysis constitutes the basis for the designing of every maintenance system of any technical object. The result is information obtained about the object, including usability, diagnostic, functional, special maintenance, and any other data.

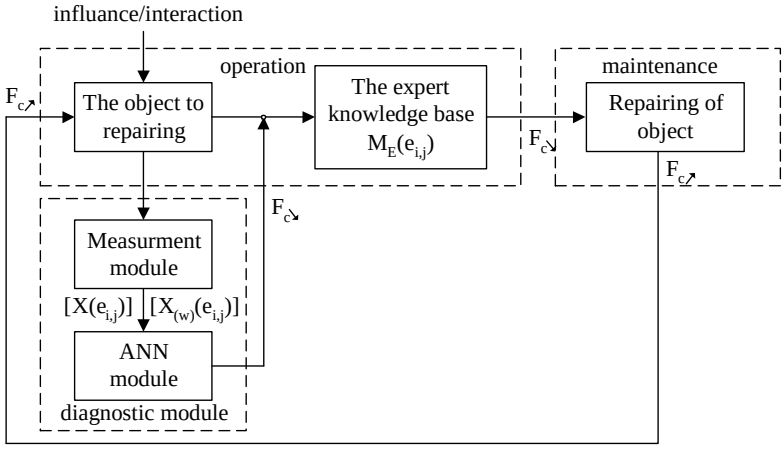

where: $X(e_{i,j})$ – diagnostic signal in j^{th} element of ith set; $X_{(w)}(e_{i,j})$ – model signal for $X(e_{i,j})$ signal; F_C – function of the use of the object.

Fig. 1. Diagram of the operation process for the technical object utilising an artificial neural network
Rys. 1. Schemat systemu obsługiwania technicznego obiektu wykorzystującego sztuczną sieć neuronową

2. Method of functional and diagnostic analysis of a technical object

Determination of the maintenance function of a technical object can occur on the basis of a functional and diagnostic analysis. A diagnostic study of a technical object is the domain of the reliability theory, diagnostics, and the operation of technical objects. The issue of the determination of maintenance information is a complex process. This process begins with the recognition of the properties of the object in question, the nature of its work, and the development of its functional and diagnostic (maintenance) model.

It is only on a further stage that the object's diagnostic structure is determined, which constitutes the object's internal structure including a diagnostic description. The final state of this process is the obtained internal structure of the object, which is adapted to the realisation of the maintenance (prophylactic) process. The issue of the diagnostic study of a complex technical object described in [1, 2, 3, 4] constitutes the basis of the process of the location of defects and an assessment of the object's state.

The idea of a diagnostic study comes down to an analysis and study (transformation) of the internal and functional structure of the object, the effect of which is the obtaining of its diagnostic structure [1, 2, 3, 5]. The final effect of this process is the criterion of an optimal programme of the control of the state or location of defects. It is convenient to conduct a diagnostic analysis of a given object by using its previously constructed functional model, which reflects it usability, functions, and any other properties. As a result, a set of diagnostic information will be determined concerning the object's state and its basic (constructional) elements. Such a form of the set of diagnostic information constitutes the basis for the organisation of an optimal maintenance system. The proposed model of an organisation of the maintenance system will be feasible if the diagnosis of the object is realised in a trivalent assessment of states.

The basis of all the actions undertaken by the user in connection with a technical object, such as diagnosing and operation, is the diagnostic information determined. Most frequently, it is obtained through an examination of the state, an analysis of its model, and an observation of the real operational process of an object of a given class. The most commonly used and convenient form of the presentation of an object in the process of a diagnostic study is its functional model. During the preparation of the functional model of the object, the following should be taken into consideration: the object's functional diagram, the working principle of the object, its purpose, as well as the depth of the penetration into the object's structure in the process of location of defects, etc.

The technical object {O} used for tests in the present study is a reparable complex technical object of an analogue class. While preparing a diagnostic model of this class of an object, its internal structure was divided into four levels of the maintenance structure (Fig. 2): level one: object {O}, level two: assemblies (in object {O}), level three: subassemblies (in each assembly $\{E_i\}$), level four: modules-basic elements (in each subassembly, of each assembly of the object).

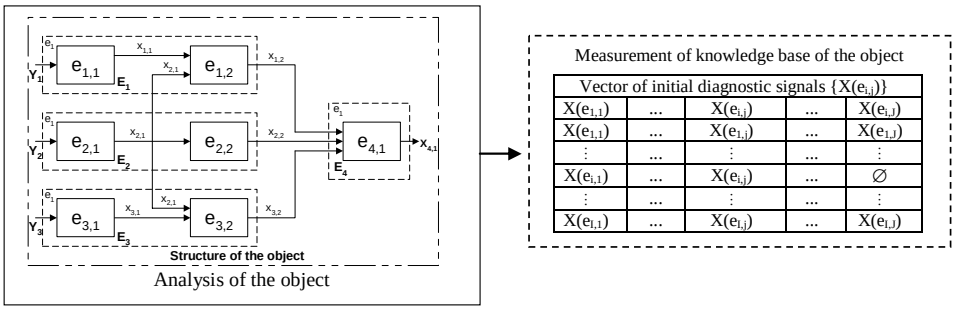

where: E_i – ijth functional assembly in the object, e_i – j jth subassembly or functional element in a given assembly, $Y_{1,2,3}$ – input signals in the object.

Fig. 2. Functional and diagnostic model of the object
Rys. 2. Model funkcjonalno-diagnostyczny obiektu

The first level of the maintenance structure of the object is constituted by the object itself. It is a set of functional assemblies $\{E_i\}$. The assemblies of the object constitute the second level of the object's maintenance structure, while each of them is a set of operation subassemblies. Subassemblies in assemblies constitute the third level of the object's maintenance structure. The lowest level, i.e. the fourth level of the structure, is constituted by the basic elements: modules.

As the basic element – modules, the smallest distinguished (as a result of the division) functional element in the object on the output where there occurs at least one diagnostic signal is defined. If there is a larger number of signals on the output of a given element, then one generalised signal is determined. There is a rule in the present study that, to each element of the object, only one diagnostic signal is assigned.

Each functional subassembly of the object consists of basic elements, which are the smallest and indivisible functional element in the object. It was assumed in the paper that such an element is understood as a basic element in the object where there is an output (diagnostic) signal on its output. If object {O} has been divided into *i* structural levels, and in each of them, there are *j* basic elements, then each of the object's structural levels constitutes a set of operating elements $\{e_{i,j}\}$, which was presented in the form of the following dependence:

$$\{O\} \Rightarrow (\{E_i\} \Rightarrow \{e_j\}) = \{e_{i,j}\} \tag{1}$$

where: {O} – object's internal structure, $\Rightarrow$ – relation of result (division), E_i – ith functional assembly of the object, e_j – jth subassembly in ith assembly of the object, $\{e_{i,j}\}$ – set of basic elements in the object (structure of the object).

The division of the object's internal structure $\{e_{i,j}\}$ accepted in the paper explicitly defines the depth of penetration into this structure. The accepted division is considered to be sufficient if we distinguish the basic module-element in

the structure of the object. One of the purposes of the functional-diagnostic analysis is the determination of the object's state. The object's state is determined on the basis of an examination of the set of output (diagnostic) signals $\{X(e_{i,j})\}$(Table 1) [1, 5, 6]. The set of its functional elements $\{e_{i,j}\}$ determined during a diagnostic study of the object constitutes the basis for the list included in the table of a set of diagnostic signals (Table 1).

Table 1. Table of object's input diagnostic signals
Tablica 1. Tablica wejściowych sygnałów diagnostycznych obiektu

Object	Level of object E_i	Vector of initial diagnostic signals $\{X(e_{i,j})\}$				
		$X(e_{1,1})$	...	$X(e_{i,j})$	...	$X(e_{i,J})$
O	E_1	$X(e_{1,1})$	...	$X(e_{1,j})$	...	$X(e_{1,J})$
	⋮	⋮	...	⋮	...	⋮
	E_i	$X(e_{i,1})$	...	$X(e_{i,j})$	...	$X(e_{i,J})$
	⋮	⋮	...	⋮	...	⋮
	E_I	$X(e_{I,1})$	...	$X(e_{I,j})$	...	$X(e_{I,J})$

where: $X(e_{i,j})$ – diagnostic signal of jth element in i^{th} assembly.

For this purpose, on the basis of the object's diagnostic model (Fig. 1), an optimum number of check paths is determined. Each check (d_i) covers a certain set of elements (e_j) in a given assembly (E_i), which means that a subset of elements $\{e_j \varepsilon E_i\}$ is assigned to diagnostic check (d_i); therefore, the check path is determined, which is described with the following dependence:

$$\underset{\substack{d_i \in D \\ i=\overline{1,I}}}{\forall} \left(d_i \mapsto \rangle e_j \langle d_i\right) \;\; ; e_j \in E_i \tag{2}$$

where: $\mapsto$ - assignment relation, $\rightarrow$ - relation of result, $\rangle e_j \langle d_i$ - subset of basic elements ($e_{i,j}$) covered by check d_i.

The process of the determination of the technical state of the functional elements and of the whole object consists in the measurement of the properties of each signal, and in a comparison of the measurement results obtained, with the properties of their model signals $X_{(w)i,j}$. In the process of diagnosing of technical object, there is a rule according to which the distinguished signal must be compared with the model in order to check it. If, during an examination of the object, nominal k^{th} properties of input signals (Table 1) is guaranteed, then the object's output signal characterises its state [1, 2, 4. 5, 6]. As a result of the di-

agnostic analysis, a set of checks available {D} in the object was obtained in an analytical form.

$$D = \{d_i\} \rightarrow X_{i,j} \Leftrightarrow \underset{\substack{d_i \in D \\ i=\overline{1,I}}}{\forall} \left(d_i \mapsto \rangle e_j \langle d_i\right); \; e_j \in E_i \qquad 3)$$

In order to assess the signal tested, one must compare it with the model. In the diagnostic practice of objects, simpler checking is used, which consists in establishing whether the values of output signals are within the range of their admissible or boundary changes. Result D_i of check d_i depends of the state of elements ($e_{i,j}$) in path $\rangle e_j \langle d_i$. Diagnostic decision rules [5, 7, 8, 9, 10] for a trivalent assessment of the object's states were presented in the form of the following dependence:

$$\underset{e_j \in E_i}{\exists} \left(\left(\varepsilon\left(e_{i,j}\right)=0\right) \Leftrightarrow \left(D_i\left(\varepsilon\left(e_{i,j}\right)=0\right)=0\right)\right) \qquad (4)$$

$$\underset{e_j \in E_i}{\forall} \left(\left(\varepsilon\left(e_{i,j}\right)=1\right) \Leftrightarrow \left(D_i\left(\varepsilon\left(e_{i,j}\right)=1\right)=1\right)\right) \qquad (5)$$

$$\underset{e_j \in E_i}{\forall} \left(\left(\varepsilon\left(e_{i,j}\right)=2\right) \Leftrightarrow \left(D_i\left(\varepsilon\left(e_{i,j}\right)=2\right)=2\right)\right) \qquad (6)$$

where: ($\varepsilon(e_{i,j})$) = 0 – non-operational state of element ($e_{i,j}$); ($\varepsilon(e_{i,j})$) = 1 – state of incomplete usability of element ($e_{i,j}$);($\varepsilon(e_{i,j})$) = 2 – state of non-operation of element ($e_{i,j}$); ($D_i(\varepsilon(e_{i,j})$ = 0) – result of check with non-operational element ($e_{i,j}$); ($D_i(\varepsilon(e_{i,j})$ = 1) – result of check with an incompletely operating element ($e_{i,j}$); ($D_i(\varepsilon(e_{i,j})$ = 2) – result of check with an operational element ($e_{i,j}$).

The results of the object's diagnosis obtained from the relations (4, 5, 6) are presented in Table 2.

Table 2. Table of object's states
Tablica 2. Tablica stanów obiektu

State of object	State of module	Vector of states of elementary components $\{e_{i,j}\}$				
		$\varepsilon(e_{1,1})$	...	$\varepsilon(e_{i,j})$	...	$\varepsilon(e_{i,J})$
$W(\varepsilon(O))$	$W(\varepsilon(E_1))$	$W(\varepsilon(e_{1,1}))$	...	$W(\varepsilon(e_{1,j}))$	...	$W(\varepsilon(e_{1,J}))$
	⋮	⋮	...	⋮	...	⋮
	$W(\varepsilon(E_i))$	$W(\varepsilon(e_{i,1}))$	...	$W(\varepsilon(e_{i,j}))$	...	$\varnothing$
	⋮	⋮	...	⋮	...	⋮
	$W(\varepsilon(E_I))$	$W(\varepsilon(e_{I,1}))$	...	$W(\varepsilon(e_{I,j}))$	...	$W(\varepsilon(e_{I,J}))$

where: $W(\varepsilon(e_{i,j}))$ – value of state assessment logics for j^{th} element within i^{th} module (from the set of the accepted three-value logic of states' assessment) – {2, 1, 0}), $\varnothing$ – symbol complementing the size of table.

3. Determination of the diagnostic information on the basis of a functional and diagnostic analysis of a technical object on the example of a car engine

The method for the expert knowledge base determination presented will be verified on the example of a reparable technical object, which is an analogue controller unit for combustion automotive engine with its peripheries. Research set-up was developed on the basis of a spark ignition engine with multi-point injection MPF1. The object was subject to a diagnostic development, as a result of which, a functional-diagnostic diagram was developed. In the example, an object was used whose internal structure (Fig. 3) is composed of seven modules (E_1, E_2,…, E_7) (Tab. 2), and each one of them, up to five elements, were distinguished [1, 4].

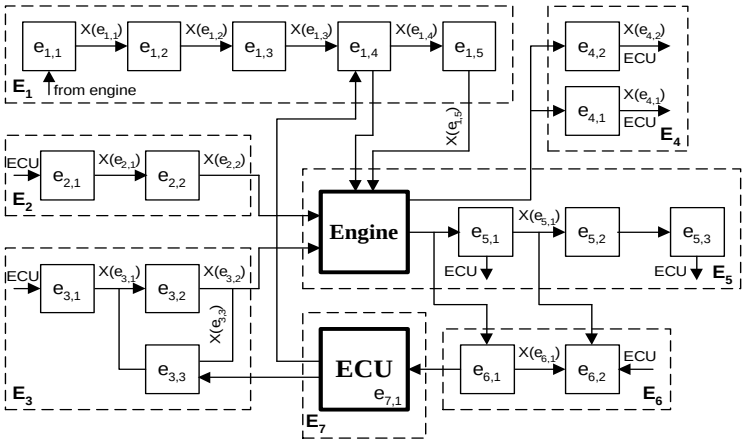

where: E_1 – ignition module: $e_{1,1}$ – automotive alternator, $e_{1,2}$ – voltage regulator, $e_{1,3}$ – battery, $e_{1,4}$ – coil ignition, $e_{1,5}$ – sparking plug; E_2 – fuelling module: $e_{2,1}$ – fuel tank ventilation valve, $e_{2,2}$ – fuel injector; E_3 – air-feeding module: $e_{3,1}$ – air flow meter, $e_{3,2}$ – throttle position sensor, $e_{3,3}$ – idle run position controller; E_4 – starting circuit: $e_{4,1}$ – combustion knocking sensor $e_{4,2}$ – coolant temperature sensor; E_5 – power supply circuit: $e_{5,1}$ – oxygen sensor (1), $e_{5,2}$ – catalyser, $e_{5,3}$ - oxygen sensor (2); E_6 – engine block: $e_{6,1}$ – crank shaft position sensor, $e_{6,2}$ – EGR valve: E_7 – $e_{7,1}$ electronic control unit.

Fig. 3. Diagram of an electronic controller for an automotive engine
Rys. 3. Schemat silnika benzynowego sterowanego elektronicznie

The internal structure of the object was divided, as a result of which, a set of functional elements was determined. The determination of the operating structure of the object was conducted in compliance with dependence (1). The results obtained were presented in Table 3.

Table 3. Internal structure of the object
Tablica 3. Struktura wewnętrzna obiektu

Assembly of the object	Structure of the object $\{e_{i,j}\}$				
E_i	e_1	e_2	e_3	e_4	e_5
E_1	$e_{1,1}$	$e_{1,2}$	$e_{1,3}$	$e_{1,4}$	$e_{1,5}$
E_2	$e_{2,1}$	$e_{2,2}$	∅	∅	∅
E_3	$e_{3,1}$	$e_{3,2}$	$e_{3,3}$	∅	∅
E_4	$e_{4,1}$	$e_{4,2}$	∅	∅	∅
E_5	$e_{5,1}$	$e_{5,2}$	∅	∅	∅
E_6	$e_{6,1}$	$e_{6,2}$	∅	∅	∅
E_7	$e_{7,1}$	∅	∅	∅	∅

The presented method of diagnosing technical objects requires the use of a uniform compliance of the designation of the elements of the object's structure. For this reason, the basic elements, modules of the object included in its functional and diagnostic model, must be "addressed" in the following manner ($e_{i,j}$), where: j – is the number of the element in a given assembly, and (i) is the ith number of this assembly of the object.

The use of DIAG software requires the preparation of input diagnostic information on the basis of a functional and diagnostic analysis of a given object. A functional and diagnostic model of an object needs to be made. On the basis of this, the following was determined: a set of basic elements, a set of diagnostic signals $\{X(e_{i,j})\}$ (Fig. 2), and a set of their model (standard) signals $\{X_{(w)}(e_{i,j})\}$. The results of measurements [6] for chosen elements of the object are presented in Tab. 4 and Fig. 4.

Table 4. Matrix of measures of diagnostic signals from the object
Tablica. 4. Tablica pomiarowych sygnałów diagnostycznych obiektu

Level of object E_i	Vector of initial diagnostic signals $\{X(e_{i,j})\}$ [V]				
E_i	e_1	e_2	e_3	e_4	e_5
E_1	12.51	12.37	11.32	47.85	47.71
E_2	13.12	49.40	∅	∅	∅
E_3	2.91	3.82	12.21	∅	∅
E_4	1.6	2.95	∅	∅	∅
E_5	0.97	0.91	∅	∅	∅
E_6	2.85	12.72	∅	∅	∅
E_7	5.24	∅	∅	∅	∅

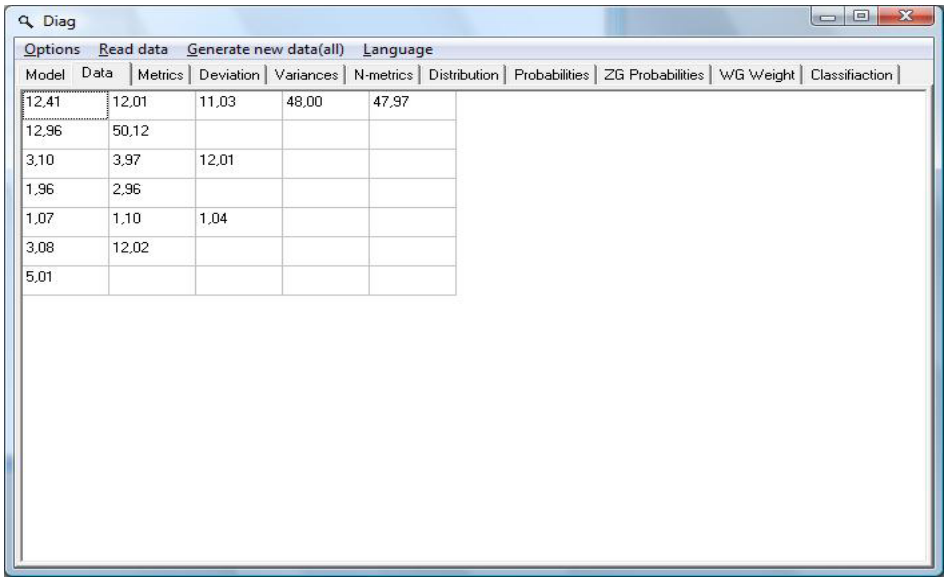

Fig. 4. Loading of input data to DIAG programme
Rys. 4. Dane wejściowe dla programu DIAG

4. Summary

The article presents a method to control the operational process of a technical object. The basis of the presented system of regulation of the object's function of use (F_c) is constituted by diagnostic information that concerns the object's states. The diagnostic information is developed in a diagnostic system of the recognition of the states of a reparable technical object with the use of an artificial neural network. The accepted method of diagnosing by a neural network consists in comparing of the image of vectors of diagnostic signals with the images of their models. For this purpose, the technical object examined was subject to a diagnostic study. An important stage of the work is a functional and diagnostic analysis of the object. For this reason, the paper presents and describes the method of the division of the object's internal structure. As a result of this division, a set of basic elements and a set of diagnostic signals were determined. The grounds for the development of diagnostic decisions concerning the object's state is constituted by an analysis in the Euclidean space of elementary metrics of the distances-divergences of the vectors of diagnostic signals (measurement ones vs. their models).

References

[1] Będkowski L., Dąbrowski T.: Podstawy eksploatacji cz. 2. Wyd. WAT, Warszawa 2006.
[2] Duer S., Duer R.: Computer diagnostic system with expert knowledge for state's control of technical objects. "SYSTEM MODELLING CONTROL – SMC'2005". Proceedings of the 11th International Conference on "System Modelling Control", Zakopane, Poland. Wyd. EXIT, Warszawa 2005, p. 69–77.
[3] Duer S.: The concept of assistant system for analogue class technical object servicing. Sixth International Conference On Unconventional Elektromechanical And Electrical System Uees'04. Alushta, The Crimea, Ukraine, 2004, p. 687–690.
[4] Duer S.: System ekspertowy wykorzystujący trójwartościową informację diagnostyczną wspomagający obsługiwanie złożonego obiektu technicznego. Zagadnienia Eksploatacji Maszyn Z. 4(152) VOL. 42, 2007, pp. 195–208.
[5] Duer S.: An algorithm for the diagnosis of reparable technical objects utilizing artificial neural Network. Journal Scientific Problems Of Machines Operation And Maintenance, Committee Of Machine Engineering Polish Academy Of Sciences. Vol. 43, No. 1(53) 2008, pp. 101–113.
[6] Duer S., Duer R., Duer P., Płocha I.: Measurement system for the diagnosis of analogue technical objects with the use of artificial neural networks. Academic Journals, Poznan University of Technology, s. Electrical Engineering, 2008 (in publishing).
[7] Białko M.: Podstawowe właściwości sieci neuronowych i hybrydowych systemów ekspertowych. Wydawnictwo Politechniki Koszalińskiej, Koszalin 2000.
[8] Buchannan B., Shortliffe E.: Rule – Based expert systems. Addison – Wesley Publishing Company 1985.
[9] Hayer-Roth F., Waterman D., Lenat D.: Building expert systems. Addison – Wesley Publishing Company 1983.
[10] Waterman D.: A guide to export systems. Addison – Wesley Publishing Company 1986.

Manuscript received by Editorial Board, March 03th, 2009.

Wyznaczanie informacji diagnostycznej obiektu technicznego na podstawie analizy funkcjonalno-diagnostycznej na przykładzie silnika samochodowego

S t r e s z c z e n i e

W pracy zaprezentowano metodę wyznaczania specjalistycznej bazy wiedzy obiektu technicznego na podstawie analizy funkcjonalno-diagnostycznej, z wykorzystaniem trójwartościowej informacji diagnostycznej. Zaprezentowano także ogólny schemat złożonego obiektu technicznego, opisano jego strukturę wewnętrzną. Wykonano analizę diagnostyczną, w efekcie której wyznaczono zbiory elementów funkcjonalnych obiektu i ich sygnały diagnostyczne. Zaprezentowano także metodykę wykonywania opracowania diagnostycznego obiektu technicznego, w efekcie którego opracowano model funkcjonalno-diagnostyczny, będący podstawą do wyznaczenia wstępnej informacji diagnostycznej, którą wyznaczają zbiory informacji, dotyczące elementów podstawowych-modułów i ich sygnałów wyjściowych.

Uzyskane rezultaty teoretyczne w pracy zweryfikowano praktycznie na przykładzie systemu sterowania pracą silnika benzynowego. Badany obiekt jest złożonym i naprawialnym obiektem technicznym. Należy on do tej grupy urządzeń technicznych, dla których wymagany jest krótki czas ich przestojów (użytkowanie nieefektywne obiektu).